Optical Air Eliminator (US Patent #7000628)

Refined Fuels Applications (A8981 & A8981A)

Installation and Parts

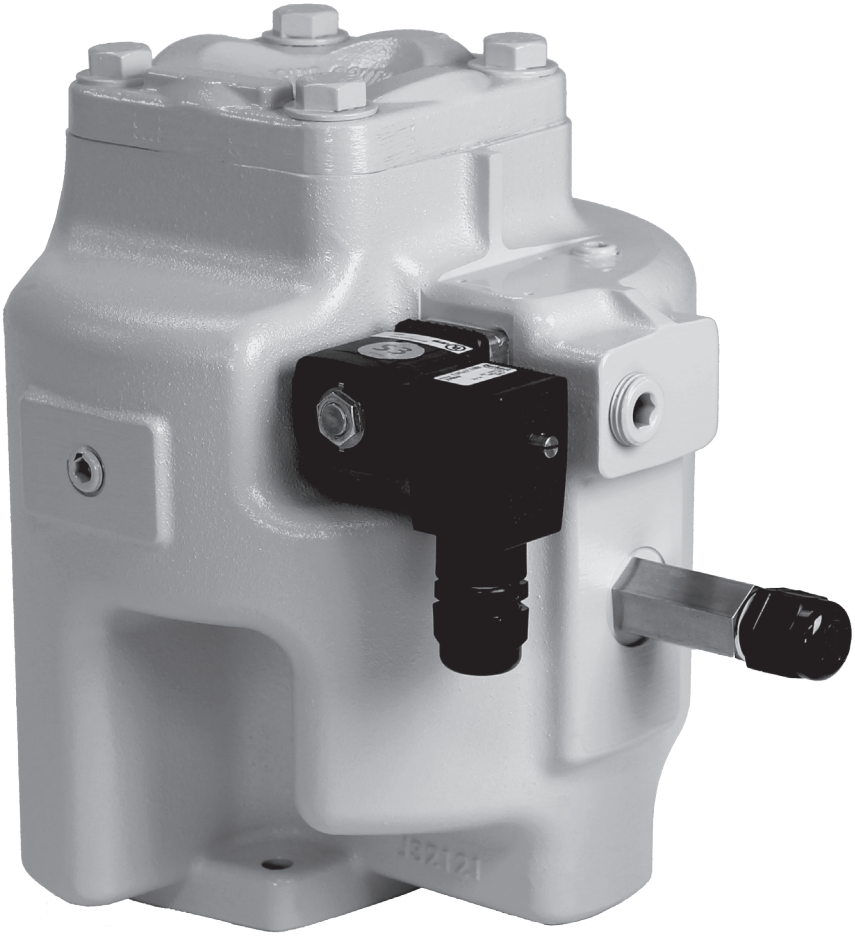

TABLE OF CONTENTS

INTRODUCTION

Safety Procedures 3
Specifications 4
Dimensions 4
General Information 5
How Optical Air Eliminators Work 5

INSTALLATION

New Installations 7
Retrofit Installations 7
Wiring 9

MAINTENANCE

Disassembly 11
Reassembly 13
Optical Sensor Replacement 14
Troubleshooting 14

BILL OF MATERIALS

Exploded View 15
Bill of Materials 15

NOTICE

This manual provides warnings and procedures that are intended to inform the owner and/or operator of the hazards present when using the Liquid Controls Meter on LP-Gas and other products. The reading of these warnings and the avoidance of such hazards is strictly in the hands of the owner-operators of the equipment. Neglect of that responsibility is not within the control of the manufacturer of the meter.

Publication Updates and Translations

The most current English versions of all Liquid Controls publications are available on our web site, **www.lcmeter.com**. It is the responsibility of the local distributor to provide the most current version of LC manuals, instructions, and specification sheets in the required language of the country, or the language of the end user to which the products are shipping. If there are questions about the language of any LC manuals, instructions, or specification sheets, please contact your local distributor.

Be Prepared

⚠ WARNING

- Before using this product, read and understand the instructions.
- All work must be performed by qualified personnel trained in the proper application, installation, and maintenance of equipment and/or systems in accordance with all applicable codes and ordinances.
- When handling electronic components and boards, always use proper Electrostatic Discharge (ESD) equipment and follow the proper procedures
- Make sure that all necessary safety precautions have been taken.
- Provide for proper ventilation, temperature control, fire prevention, evacuation, and fire management.
- Provide easy access to the appropriate fire extinguishers for your product.
- Consult with your local fire department, state, and local codes to ensure adequate preparation.
- Read this manual as well as all the literature provided in your owner's packet.
- Save these instructions for future reference.
- Failure to follow the instructions set forth in this publication could result in property damage, personal injury, or death from fire and/or explosion, or other hazards that may be associated with this type of equipment.

Observe National and Local Codes

⚠ WARNING

North America - Installations must be in full accordance with the National Electrical Code (US) or the Canadian Electrical Code respectively to maintain the hazardous location ratings on the product.

Outside of North America - Installations must be in full accordance with EN 60079-14 to maintain the hazardous location ratings on the product. Use Ex d certified cable glands only. For ambient temperatures above 70ºC, use field wiring rated 20ºC above the maximum ambient temperature.

WARNING: ***Explosion Hazard*** -
Substitution of components may impair suitability for hazardous area applications.

WARNING: ***Explosion Hazard*** -
When in hazardous locations, turn power OFF before replacing or wiring modules.

WARNING: ***Explosion Hazard*** -
Do NOT disconnect equipment unless power has been switched OFF or the area is known to be Non-Hazardous.

Safely Evacuate Piping System

⚠ WARNING

Before disassembly of any meter or accessory component:

- **All internal pressures must be relieved and all liquid drained from the system in accordance with all applicable procedures.**
- **Pressure must be 0 (zero) psi.**
- **Close all liquid and vapor lines between the meter and liquid source.**

Failure to follow this warning could result in property damage, personal injury, or death from fire and/or explosion, or other hazards that may be associated with this type of equipment.

Specifications (Optical Air Eliminators A8981 & A8981A)

Environmental Rating
- NEMA 4X

Safety
- Designed to meet Class I, Division 2 requirements

Materials of Construction
Class 1
Body: Aluminum
Solenoid: Brass

Class 2
Body: Anodized Aluminum
Solenoid: Stainless Steel

Pressure Rating
Maximum non-shock working pressure
- 150 PSI (10.3 BAR)

Maximum differential pressure
- 100 PSI (6.9 BAR)

Temperature Rating
- -40 to 160 °F (-40 to 71 °C)

Products
Class 1: Refined Fuels
- Gasoline, Gasohol, Diesel fuel, and Fuel Oil

Class 2 Aviation
- Av-Gas and Jet Fuel

Solenoid (S3)
Voltage: 12 VDC ± 2 VDC; *24 VDC ± 4 VDC optional*
Current maximum**:** 1 A

Optical Sensor
Voltage: 10 to 28 VDC
Current maximum**:** 0.5 A

Dimensions

FRONT

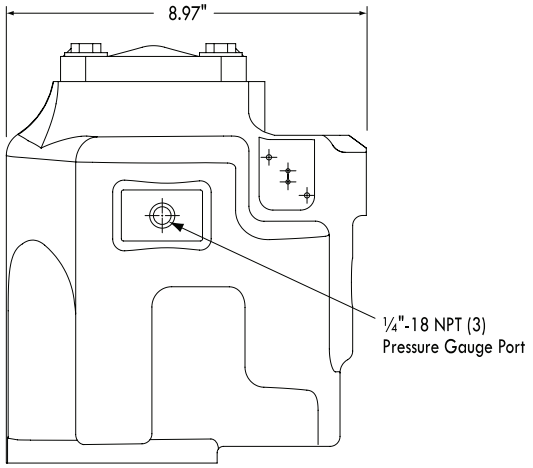

SIDE

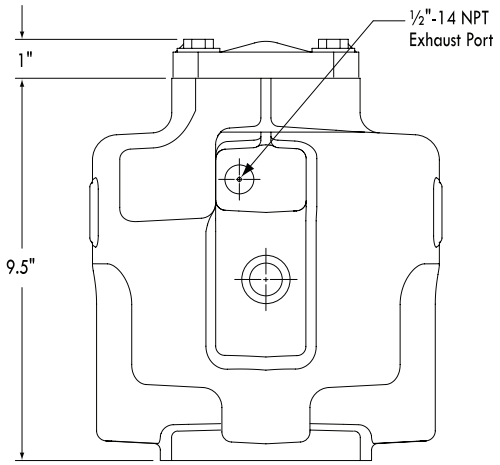

Dimensions shown are not for construction use. Consult factory when certified Engineering Drawings are required.

BOTTOM

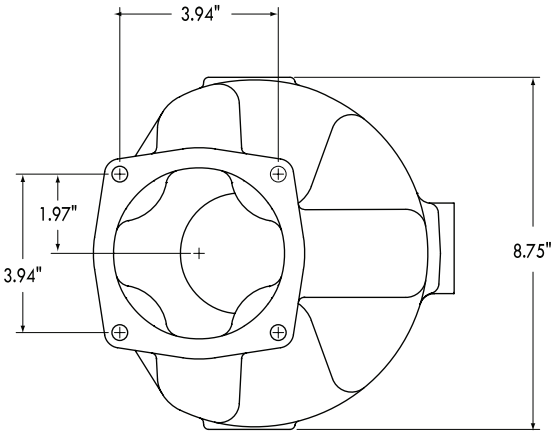

OPTICAL AIR ELIMINATOR WITH HIGH CAPACITY STRAINER

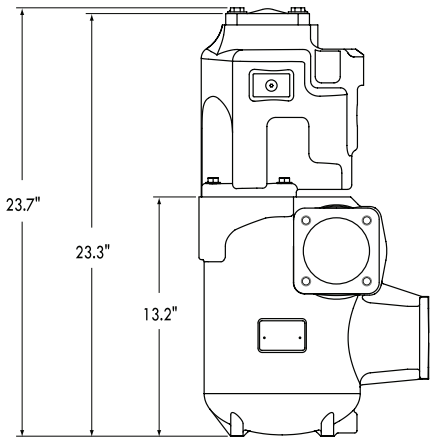

General Information

The Liquid Controls Optical Air Eliminator is designed for use with LectroCount® Electronic Registers. An optical sensor, installed in the wall of the air eliminator housing, is used to monitor the liquid level. The presence or absence of liquid at the sensor level activates or deactivates a solenoid valve located at the top of the air eliminator to vent air or vapor from the system.

The optical air eliminator is designed to work with Liquid Controls M5, M7, M10, M15, and M25 meters, for applications measuring refined petroleum products. Designed with the same mounting dimensions as Liquid Controls mechanical air eliminators, the optical air eliminator does not require plumbing changes to retrofit to existing meter installations; however, electronic registers do require CPU board part number 81920 for LCR and LCR-II; CPU board part number 81924 for LC³. The optical air eliminator also requires the use of a solenoid-operated control valve such as the E-7 or A2848-11 on the outlet side of the meter.

CLASS 2

The Liquid Controls Optical Air Eliminator can be manufactured for Class 2 aviation applications. The Class 2 optical air eliminator (Part #A8981A) is made with an anodized aluminum housing and a stainless steel solenoid valve.

How the Optical Air Eliminator Works

A solenoid valve, located at the top of the air eliminator, is either open or closed. When the liquid level is below the optical sensor (Figure 1), and a delivery is initiated, the solenoid valve opens and vents air and vapor to atmospheric pressure. At the same time, a solenoid-actuated control valve (A2982-11 or A2848-11) closes at the meter outlet.

When liquid rises to the optical sensor level as the air is exhausted (Figure 2), the optical air eliminator solenoid valve closes and prevents continued venting to atmospheric pressure. At the same instant, the control valve at the meter outlet opens so that a delivery may begin or continue. This functionality ensures that only liquid passes through the meter for measurement.

As long as a delivery is active and the liquid level remains at or above the optical sensor, the optical air eliminator solenoid valve remains closed and the control valve remains open. If the liquid level should drop below the optical sensor, the optical air eliminator solenoid valve opens and the control valve closes. When the delivery is complete, the control valve closes and the printer prints a delivery ticket. The optical air eliminator solenoid valve is not active between deliveries and remains OFF or closed.

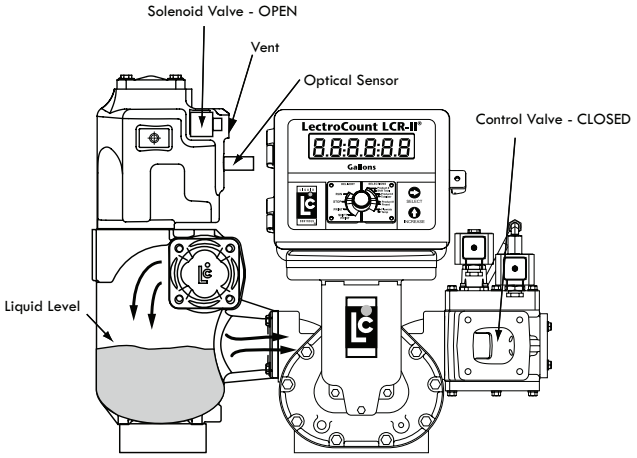

Figure 1: Liquid Level Below Optical Sensor

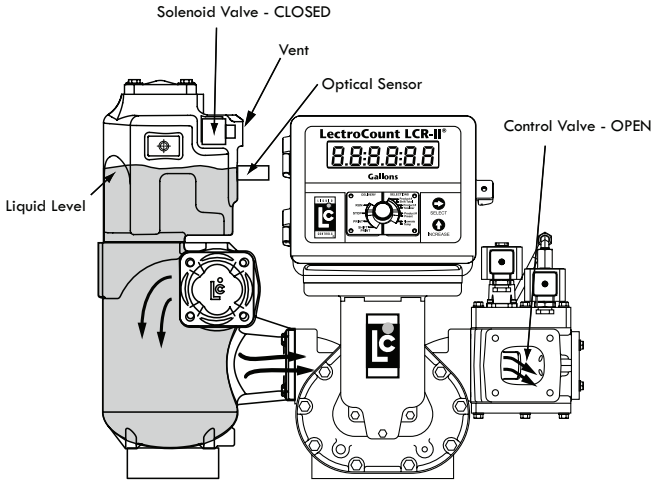

Figure 2: Liquid Level At or Above Optical Sensor

How the Optical Air Eliminator Works

The figures to the left show a cutaway view of the vent port through the solenoid valve. This port has been designed to optimize the venting of air and vapor from the optical air eliminator.

When the liquid level is below the sensor, the S3 solenoid valve is open and allows air and vapor to vent through the solenoid valve as shown in Figure 4. When the liquid level is at or above the optical sensor, the S3 solenoid valve closes the vent path as shown in Figure 5.

The diagram in Figure 6 shows the LectroCount register logic for a preset delivery. In order to function properly, the optical air eliminator must be used in conjunction with a solenoid-actuated control valve at the meter outlet, such as the A2982-11 or A2848-11.

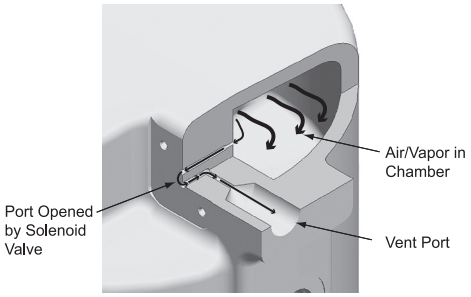

Figure 4: Solenoid and Port Open

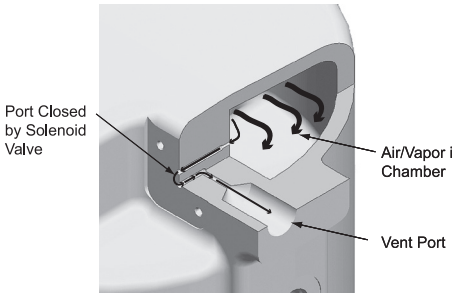

Figure 5: Solenoid and Port Closed

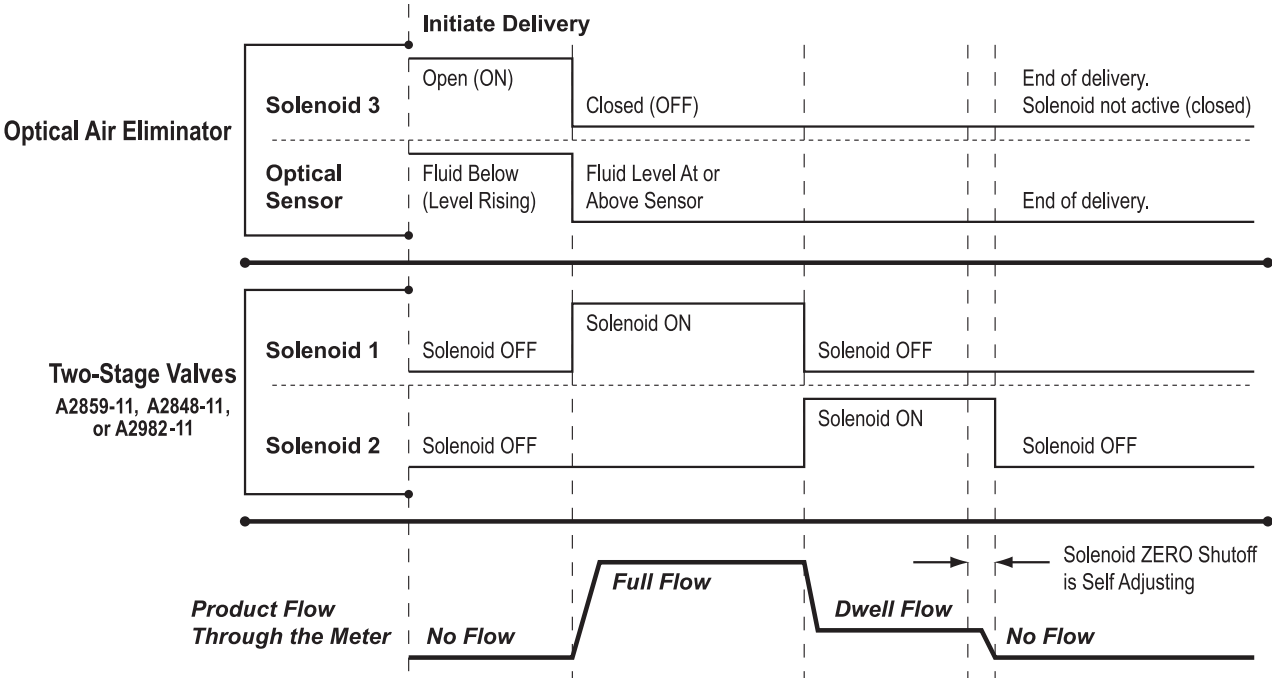

Figure 6: Optical Air Eliminator Operating Sequence.

New Installations

When ordered with a new meter, the optical air eliminator is supplied mounted atop a strainer on the inlet side of the meter. An example is the meter with high-capacity strainer, two-stage valve, and LectroCount LCR-II® Electronic Register shown in the figure to the right.

A vent line must be connected from the output port of the optical air eliminator. This connection is ½" NPT. The vent line must be connected to an appropriate receptacle such as an overflow tank on a truck.

The optical air eliminator solenoid valve and optical sensor are supplied pre-wired to the LectroCount Electronic Register.

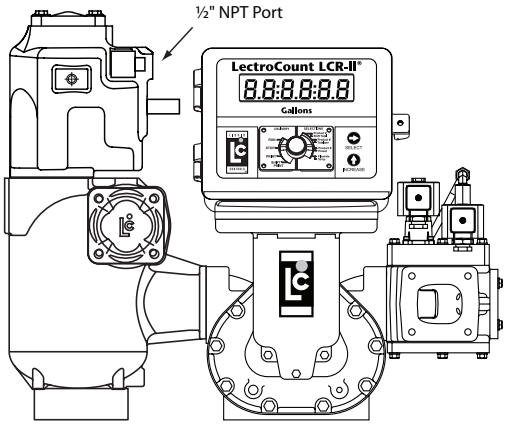

Figure 7: New Assembly

Retrofit Installations

Depending on the existing configuration, adding an optical air eliminator valve may require modification of the vent piping, modification or change of the outlet valve, and modification or change of the register.

The optical air eliminator requires the following components to operate:

- LectroCount LCR/LCR-II Electronic Register with internal CPU board Part Number 81920 or LC³ with CPU board Part Number 81924.
- Electronically-controlled outlet valve such as the A2982-11 or A2848-11.

Refer to the manuals accompanying these items for proper installation and configuration.

These retrofit instructions will show a system using a Hi-Cap strainer/air eliminator; however, the optical air eliminator may also be installed on other LC strainer assemblies used for refined petroleum products.

⚠ WARNING

Before disassembly of any meter or accessory component:

- **All internal pressures must be relieved and all liquid drained from the system in accordance with all applicable procedures.**
- **Pressure must be 0 (zero) psi.**
- **Close all liquid and vapor lines between the meter and liquid source.**

Failure to follow this warning could result in property damage, personal injury, or death from fire and/or explosion, or other hazards that may be associated with this type of equipment.

Retrofit Installations

Step 1 - Remove Old Air Eliminator and Baffel Cup

After the internal pressure has been relieved from the system and the assembly drained of liquid, remove the four bolts and washers used to fasten the old air eliminator to the top of the strainer. Inspect the O-ring and replace if necessary.

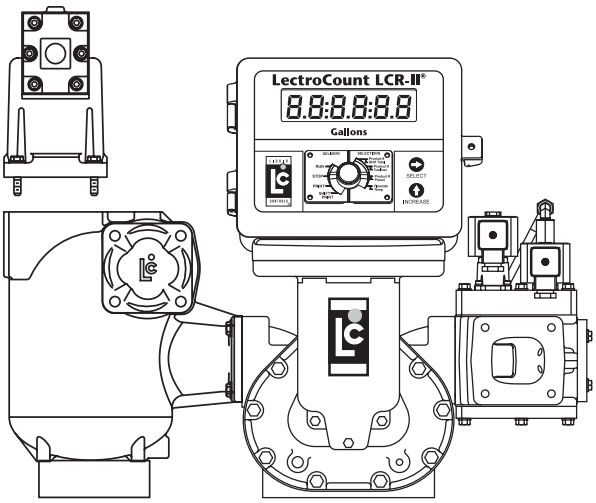

Figure 8: Remove Old Air Eliminator

Step 2 - Mount the Optical Air Eliminator

Depending on the strainer being used, the optical air eliminator may be fastened to the strainer/air eliminator in any of four 90° rotational increments. Select the most suitable orientation for ease of final installation of wiring and vent piping.

Fasten the optical air eliminator to the strainer using the four bolts and washers. Tighten the bolts to a torque of 27 lbf-ft (37 Nm).

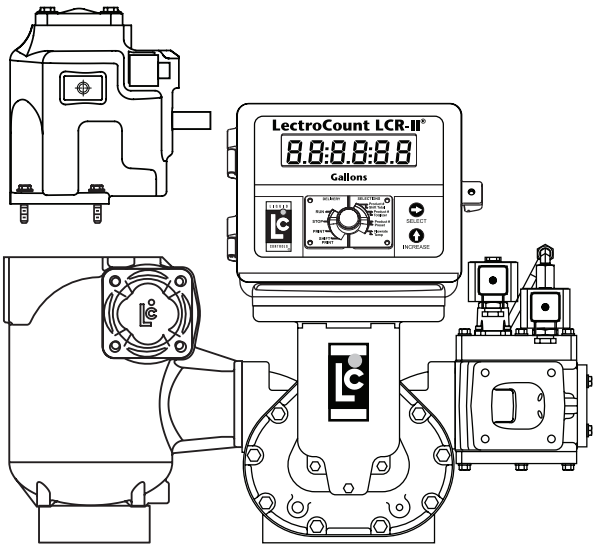

Figure 9: Orient the Optical Air Eliminator

Step 3 - Connect the Vent Piping/Tubing

This connection is ½" NPT. Remove the pipe thread protector and then connect the piping/tubing to the vent port. This piping typically connects directly to an overflow tank on a truck.

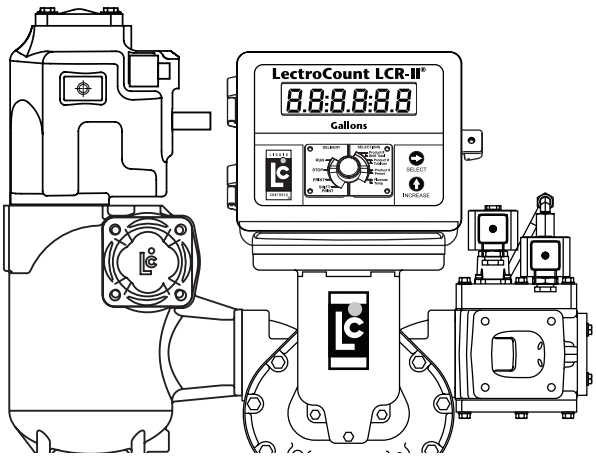

Figure 10: Fasten the Optical Air Eliminator

Step 4 - Wire the Solenoid and Sensor to the Register

Wiring instructions begin on next page.

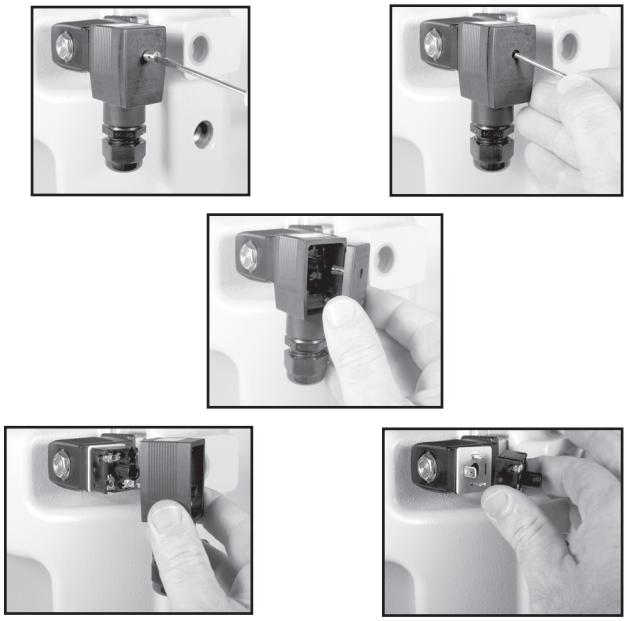

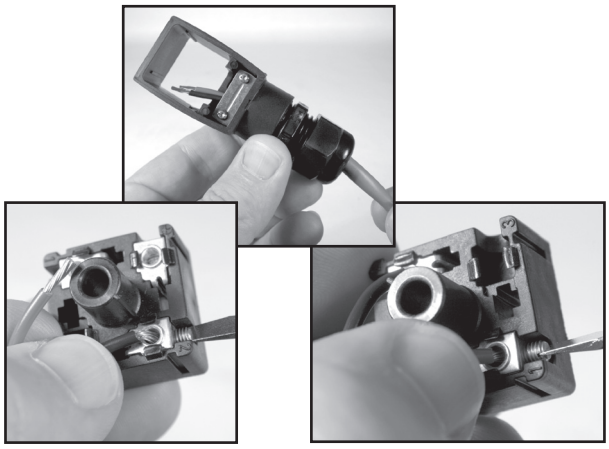

Wiring

The optical air eliminator requires a LectroCount LCR/LCR-II/LCR 600 Electronic Register with CPU board part number 81920, 84040, or 84040-4 (LC³ with 81924). If the LectroCount does not contain any of these boards, a replacement board must be ordered and installed.

81920, 84040, and 84040-4 CPU boards have an additional connector, connector J15, not present on other board models. On the LC³ 81924 CPU board it is connector J11.

To make the connection to a LectroCount Register, the optical sensor comes supplied with a 24” cable. The cable is potted in the optical sensor assembly at one end. A threaded cord grip is included to fasten the other end of the cable into the back of the LectroCount Register. The solenoid requires a 12 AWG, two-wire, braided cable, approximately 24 to 36” in length.

Step 1 - Remove Cable Plug

Loosen and remove the screw from the cover of the S3 solenoid valve cable plug. Remove the cable plug from the solenoid valve coil. Remove the cover from the cable plug housing and then remove the terminal block. Be sure to note its orientation in the housing. Leave the flat gasket in place on the coil.

Step 2 - Connect Cable to Cable Plug

Route one end of the cable through the conduit fitting and into the cable plug housing. Connect the cable wires to the terminal block. Connect the BLACK wire to Terminal 2 and the RED wire to Terminal 1. These indicators are marked on the terminal block.

⚠ Caution

Incorrect wiring can damage the optical sensor.

Observe National and Local Codes

⚠ WARNING

North America - Installations must be in full accordance with the National Electrical Code (US) or the Canadian Electrical Code respectively to maintain the hazardous location ratings on the product.

Outside of North America - Installations must be in full accordance with EN 60079-14 to maintain the hazardous location ratings on the product. Use Ex d certified cable glands only. For ambient temperatures above 70ºC, use field wiring rated 20ºC above the maximum ambient temperature.

Wiring

Step 3 - Reassemble Cable Plug

Reinstall the terminal block into the cable plug housing in the same orientation you found it. Tighten the strain relief strap inside the cable plug using the two screws. Tighten the cable gland on the bottom of the cable plug so that it seals around the cable.

Reconnect the cable plug to the coil. Place the cover over the cable plug and fasten with the screw to a torque of 8.8 in-lbs (1 Nm).

Step 4 - Connect to LectroCount Electronic Register

Route the cables from the optical sensor and solenoid valve to the back of the LectroCount register. Connect these to two open ports on the back of the register using the appropriate connectors.

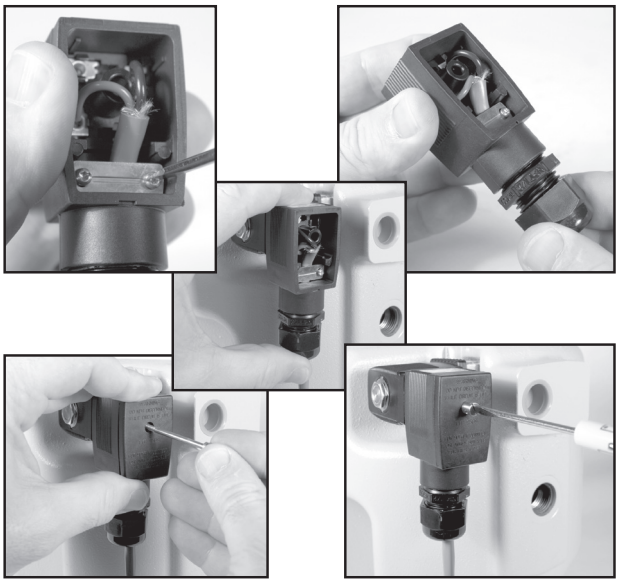

81920, 84040, or 84040-4 CPU Board (LCR-II & LCR 600)	
OPTICAL SENSOR	
WIRE COLOR	**J15 PIN TERMINAL**
Red	56
White	55
Black	54
S3 SOLENOID	
TERMINAL (WIRE COLOR)	**J15 PIN TERMINAL**
1 (Red)	52
2 (Black)	53

81924 CPU Board (LC³)	
OPTICAL SENSOR	
WIRE COLOR	**J11 PIN TERMINAL**
Red	33
White	34
Black	35
S3 SOLENOID	
TERMINAL (WIRE COLOR)	**J15 PIN TERMINAL**
1 (Red)	31
2 (Black)	32

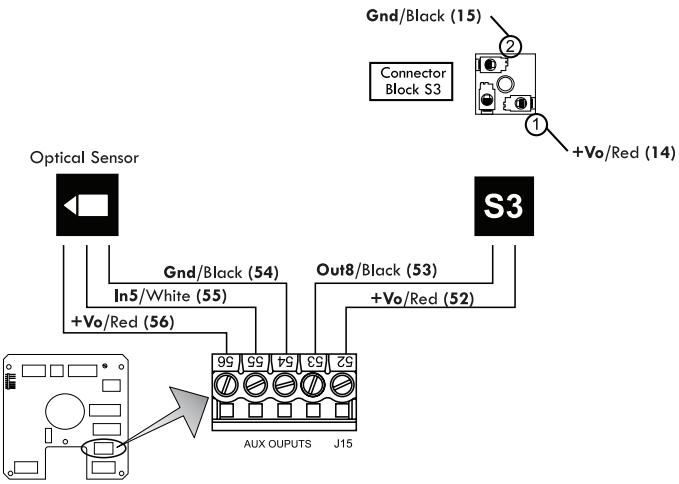

81920, 84040, or 84040-4 CPU Board (LCR-II & LCR 600) to Optical Air Eliminator Wiring

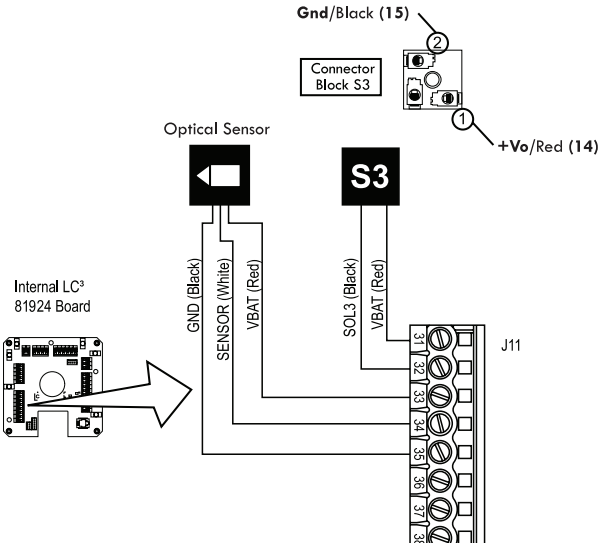

81924 CPU Board (LC³) to Optical Air Eliminator Wiring

⚠ WARNING

Before disassembly of any meter or accessory component:

- **All internal pressures must be relieved and all liquid drained from the system in accordance with all applicable procedures.**
- **Pressure must be 0 (zero) psi.**
- **Close all liquid and vapor lines between the meter and liquid source.**

Failure to follow this warning could result in property damage, personal injury, or death from fire and/or explosion, or other hazards that may be associated with this type of equipment.

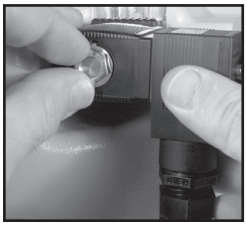

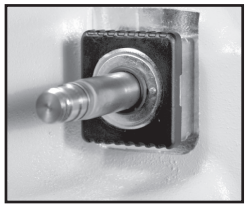

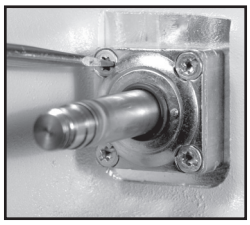

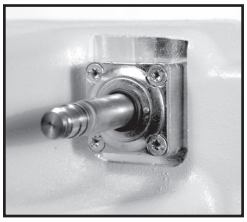

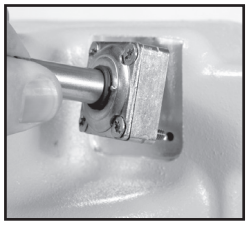

Disassembly

The optical air eliminator consists of a housing, optical sensor, and control solenoid valve. Of these three components, only the solenoid valve is serviceable; however, if any part of the solenoid is damaged, a new solenoid assembly (Part Number 502011) must be ordered. The optical sensor contains no serviceable parts because the internal components are potted. If the optical sensor fails, the complete assembly must be replaced (Part Number 81947).

Tools required:

- Flat blade screwdriver
- 14mm box end or open end wrench

Step 1

Loosen the thin hex nut holding the solenoid in place using a 14mm wrench. Remove the nut and coil off of the armature guide post.

Step 2

Remove the plastic bonnet from the armature guide post. This should be easy to remove without tools.

Step 3

Using a screwdriver, loosen the upper left and lower right screws of the valve body. These are the only two screws which hold the valve body in place. The upper right and lower left screws fasten the armature guide post and valve body together. Remove the valve body from the optical air eliminator housing.

Disassembly

Step 4

Place the valve body on a flat surface. Using a flat blade screwdriver, remove the two screws which hold the armature guide post and valve body together. Lift the armature guide post off of the valve body. The internal components consist of a plunger and a spring. Inspect the spring for damage.

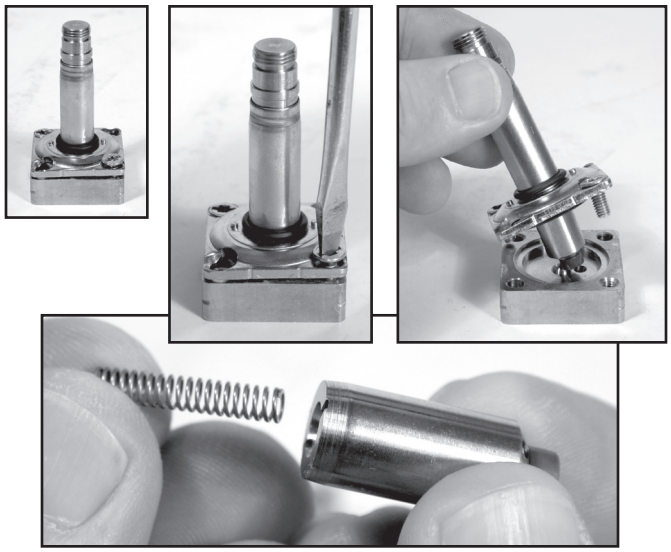

Step 5

The armature guide post is composed of four components: two O-rings, the guide post, and the flange. Inspect these components for damage.

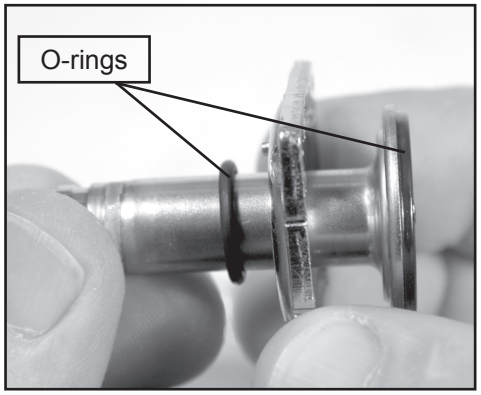

Step 6

The valve body has two O-rings found on the face which faces the housing. These two O-rings are identical. Inspect these for damage. Inspect the ports for blockage.

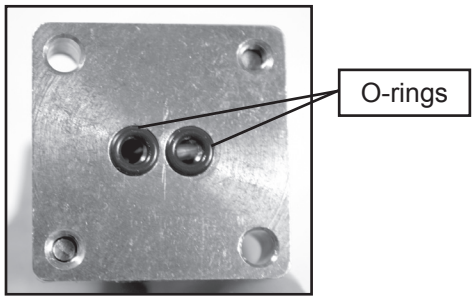

Reassembly

Step 1

Place the spring inside the plunger and insert the plunger, spring end first, into the armature guide post. Place the armature guide post assembly on the valve body.

Fasten the armature guide post to the valve body using the two screws removed earlier. Two holes of the valve body are threaded and two are not. Make sure the screws are being inserted into the threaded holes.

Note that the valve body has a number stamped into it. This will be used to set the proper orientation of the solenoid valve body with respect to the optical air eliminator housing assembly.

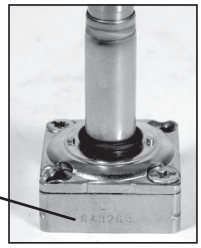

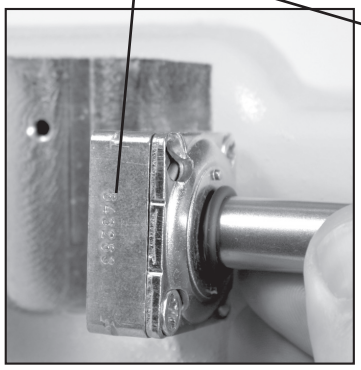

Position Stamped Numbers Properly

If the stamped numbers face away from the housing, the optical air eliminator will not function properly. The port will be blocked and the air eliminator will fail.

Step 2

Align the solenoid valve body so that the stamped number on the valve body faces the housing assembly as shown in the picture to the left. The valve body can physically be fastened to the housing assembly in one of two orientations. Only one orientation is correct.

With the valve body in the proper orientation, fasten it to the housing using the two screws removed earlier. Tighten to a torque of 15 to 18 in-lbs (1.7 to 2.0 Nm).

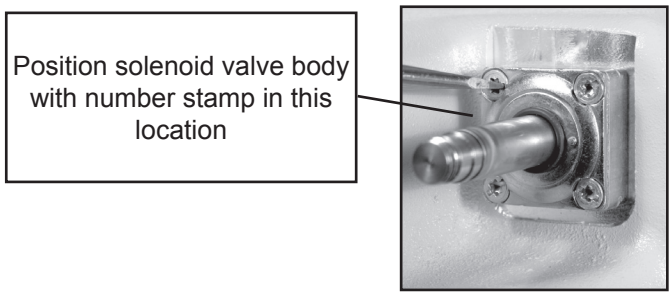

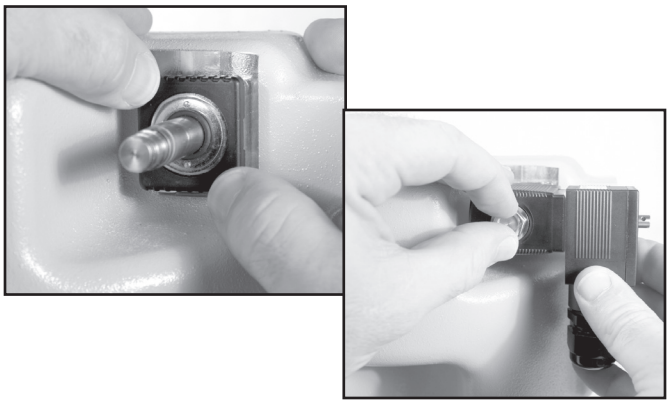

Step 3

Place the plastic bonnet over the valve body and snap in place.

Step 4

Place the coil over the armature guide post and fasten with the thin hex nut. Tighten the nut with a 14mm wrench to a torque of 4.5 in-lbs (0.5 Nm).

OPTICAL SENSOR REPLACEMENT & TROUBLESHOOTING

Optical Sensor

If the optical sensor ever needs replacement, use a 1” open end wrench to remove the optical sensor from the housing. When installing a new optical sensor, care should be taken not to exceed a torque of 75 in-lbs (8.5 Nm). Excessive torque may damage the sensor.

A light coating of grease or anti-seize lubricant should be applied to the threads of the sensor prior to assembly.

⚠ WARNING

Before disassembly of any meter or accessory component:

- **All internal pressures must be relieved and all liquid drained from the system in accordance with all applicable procedures.**
- **Pressure must be 0 (zero) psi.**
- **Close all liquid and vapor lines between the meter and liquid source.**

Failure to follow this warning could result in property damage, personal injury, or death from fire and/or explosion, or other hazards that may be associated with this type of equipment.

Troubleshooting

PROBLEM	PROBABLE CAUSE & SOLUTION
Excessive liquid flowing out of vent to spit tank.	**SCENARIO 1: SOLENOID NOT CLOSING.** • Check S3 solenoid wiring. • Measure resistance across S3 solenoid. Value should read approximately 15 ω. If not, replace S3 solenoid. • Inspect S3 solenoid for blockage. Refer to disassembly instructions. • LectroCount CPU failure. Replace CPU board. **SCENARIO 2: OPTICAL SENSOR NOT FUNCTIONING.** • Check optical sensor wiring. • Measure resistance between the RED and WHITE wires. Value should be approximately 10kΩ. If not, replace optical sensor. • LectroCount CPU failure. Replace CPU board.
No liquid flowing through meter during delivery.	**SCENARIO 1: LIQUID LEVEL NOT RISING IN OPTICAL AIR ELIMINATOR.** • Check S3 solenoid. It may not be opening to allow air/vapor to vent. • Check S3 solenoid wiring. • Measure resistance across S3 solenoid. Value should read approximately 15 ω. If not, replace S3 solenoid. • Inspect S3 solenoid for blockage. Refer to disassembly instructions. • LectroCount CPU failure. Replace CPU board. **SCENARIO 2: METER OUTLET VALVE NOT OPENING** • Check wiring of the outlet valve S1 solenoid. • Measure resistance across S1 solenoid. Value should read approximately 15Ω. If not, replace S1 solenoid. • Inspect S1 solenoid for blockage. Refer to the manual which accompanies the valve. • LectroCount CPU failure. Replace CPU board.

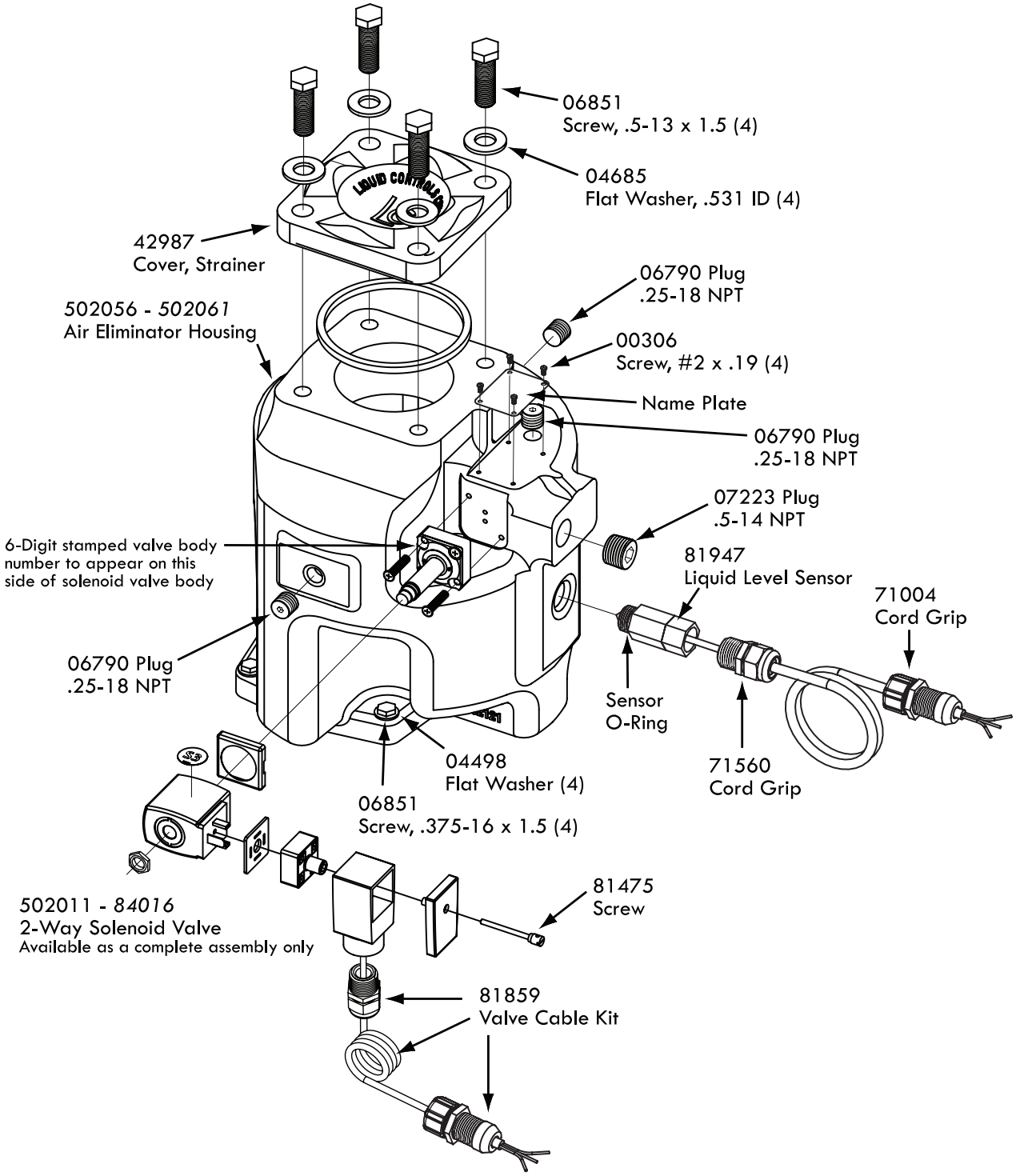

Model Number: A8981 & A8981A

Italicized part numbers indicate A8981A (Class 2) parts. If there is no italicized number, the listed part number applies to A8981 & A8981A

LIQUID CONTROLS GROUP

CORKEN · FAURE HERMAN · LIQUID CONTROLS · SAMPI · SPONSLER · TOPTECH SYSTEMS

LIQUID CONTROLS
105 Albrecht Drive
Lake Bluff, IL 60044
(847) 295-1050

LIQUID CONTROLS EUROPE/SAMPI
Via Amerigo Vespucci 1
55011 Altopascio (Lucca), Italy
+39 0583 24751

IDEX FLUID AND METERING PVT. LTD.
Survey No. 256, Alindra
Savli GIDC, Manjusar
Dist. Vadodara 391 770
Gujarat, India
+91 265 2631855

LIQUID CONTROLS SPONSLER
105 Albrecht Drive
Lake Bluff, IL 60044
(847) 295-1050

TOPTECH SYSTEMS
1124 Florida Central Parkway
Longwood, FL 32750
(407) 332-1774

Nateus Business Park
Nieuwe Weg 1-Haven 1053
B-2070 Zwijndrecht (Antwerp), Belguim
+32 (0)3 250 60 60

FAURE HERMAN
Route de Bonnetable
B.P. 20154
72406 La Ferté-Bernard Cedex, France
+33 (0)2 43 60 28 60

6961 Brookhollow West Drive
Houston, TX 77040
(713) 623-0808

CORKEN
3805 Northwest 36th St.
Oklahoma City, OK 73112
(405) 946-5576

105 Albrecht Drive
Lake Bluff, IL 60044-2242
1.800.458.5262 • 847.295.1050
Fax: 847.295.1057
www.lcmeter.com

© 2008 Liquid Controls
Pub. No. 500333
(2/12)

ISO 9001 DNV CERTIFICATED FIRM Certificate No. 08732

ISO 14001 DNV CERTIFICATED FIRM Certificate No. 05049